SECTION A-A

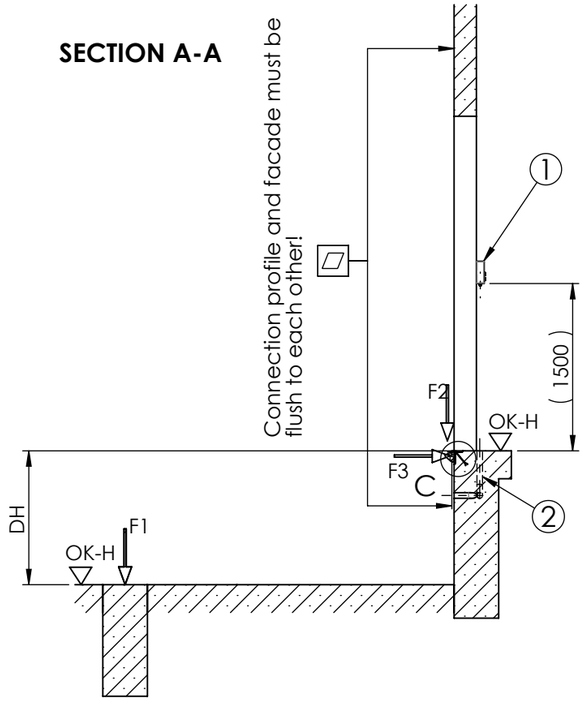

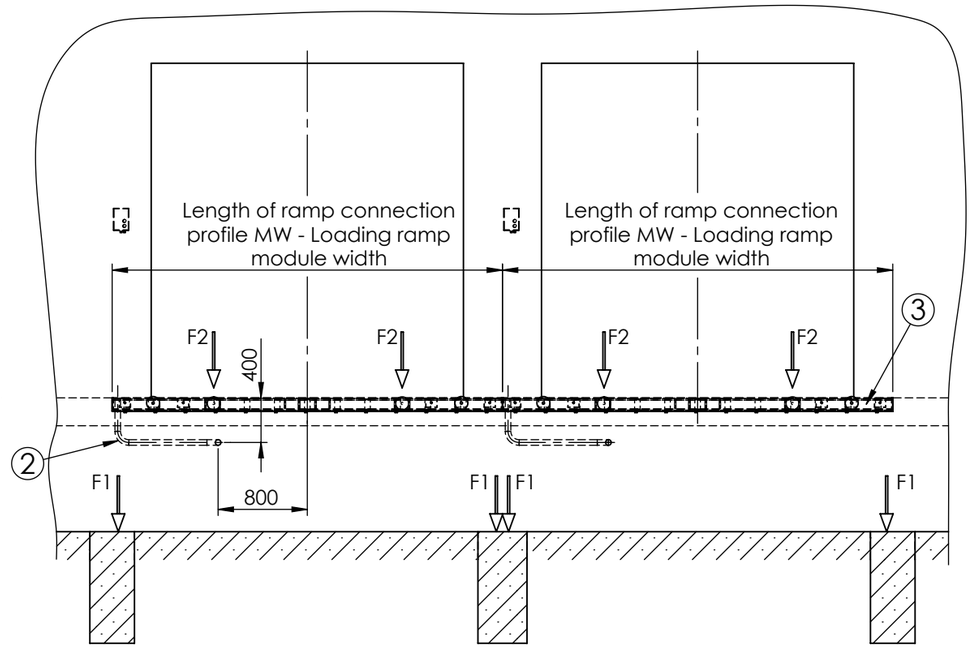

Detail "C"

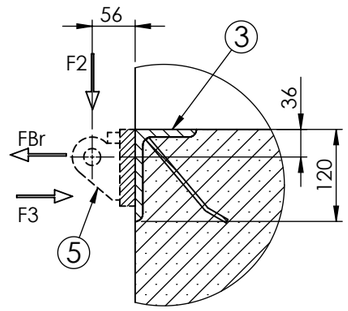

C
1 : 8

F1 = 72kN Foundation loads

F2 = 42kN Load resulting from forklift crossing

F3 = 100kN Vehicle impact load

FBr= ±10kN Braking and starting load (forklift)

Forces F2 and Fbr are led into the ramp head via the hinges.
The horizontal impact load F3 is led into the building via the ramp.

	Capacité (kN)	
	60	100
F1	72kN	112kN
F2	42kN	70kN
F3	100kN	100kN
F4	72kN	112kN
FBr	±10kN	±10kN

MW = Loading ramp module width
NL = Dock leveller nominal lenght
NW = Dock leveller nominal width
OK-F = Finish floor level
OK-H = Yard level
DH = Dock height
L1 = Distance of the foundations centre axes and the ramp head
LS = Distance of the force impact points at the ramp head for FBr and F2
LW = Distance of the force impact points at the foundations
DW = Door width

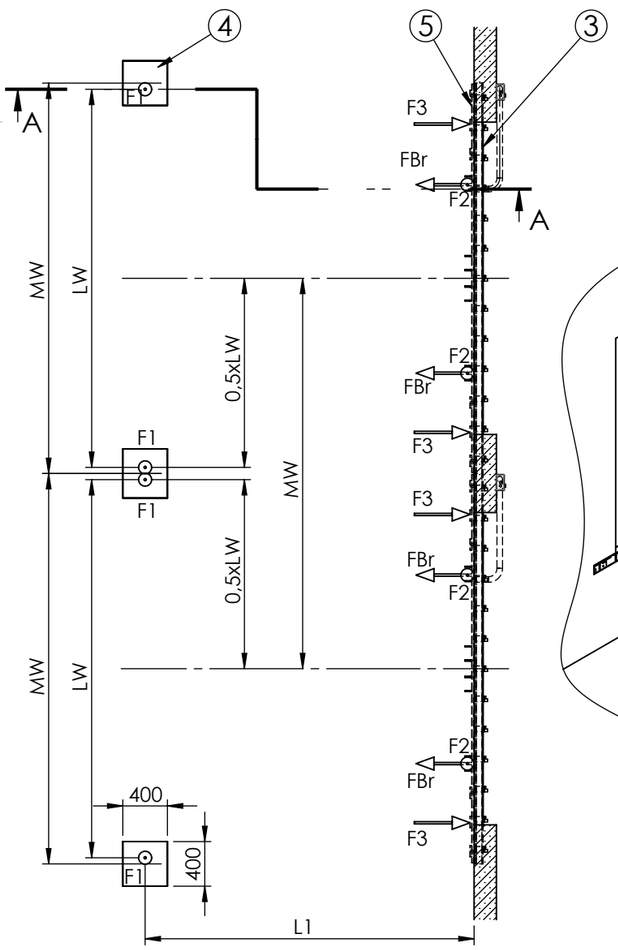

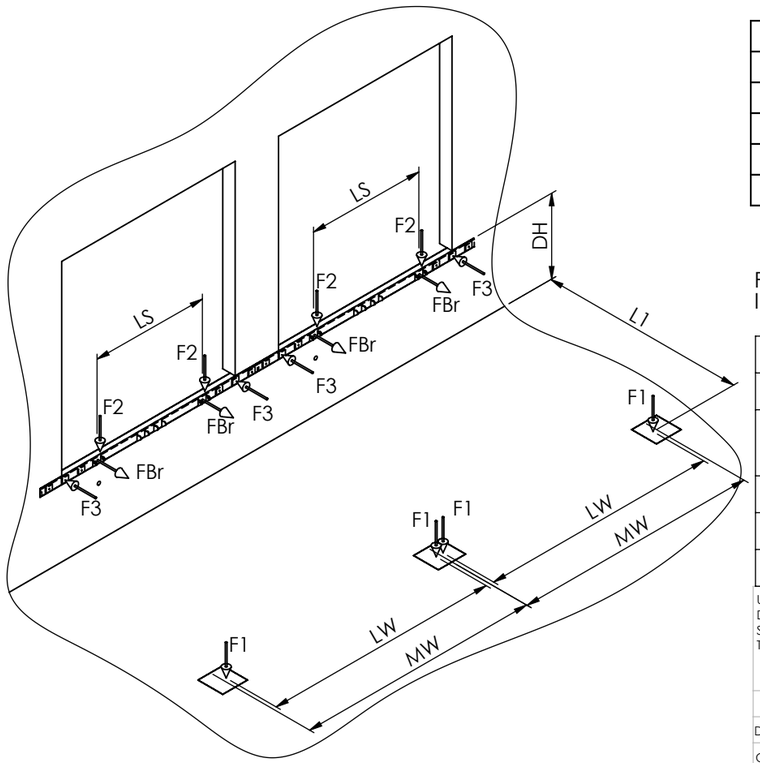

NL	L1
2000	1970
2250	2220
2450	2420
3000	2970
3500	3470

NW	LS
1750	1430
2000	1680
2200	1880
2250	1930
2400	2080

MW	LW	NW
3300	3190	3300
3500	3390	3500
3600	3490	3600

Placement of the conduits: either on the right or on the left side.
Illustration: installation on the right side

5	Rear frame: scope of delivery of the loading ramp
4	Required contact area 400 x 400 mm
3	Connection profile (min. L120x80x12). Length MW - Loading ramp module width
2	Conduit for wiring internal diameter min. 50mm angles <45°
1	Electronic control (included)
Pos.	Reference

UNLESS OTHERWISE SPECIFIED:
DIMENSIONS ARE IN MILLIMETERS
SURFACE FINISH:
TOLERANCES:
LINEAR:
ANGULAR:

FINISH:

DEBUR AND BREAK SHARP EDGES

DO NOT SCALE DRAWING

REVISION A

MATERIAL:

	NAME	SIGNATURE	DATE
DRAWN	R. Słuszczak		13.06.2023
CHK'D			
APPV'D			
MFG			
Q.A			

PJP MAKRUM Industial Group

PJP MAKRUM S.A.
Plac Kościeleckich 3
85-033 Bydgoszcz
POLAND

TITLE: Foundation plan
Loading ramp with steel legs (serial arrangement)

DWG NO. Fu.Re

A3

WEIGHT:

SCALE:1:50

EN