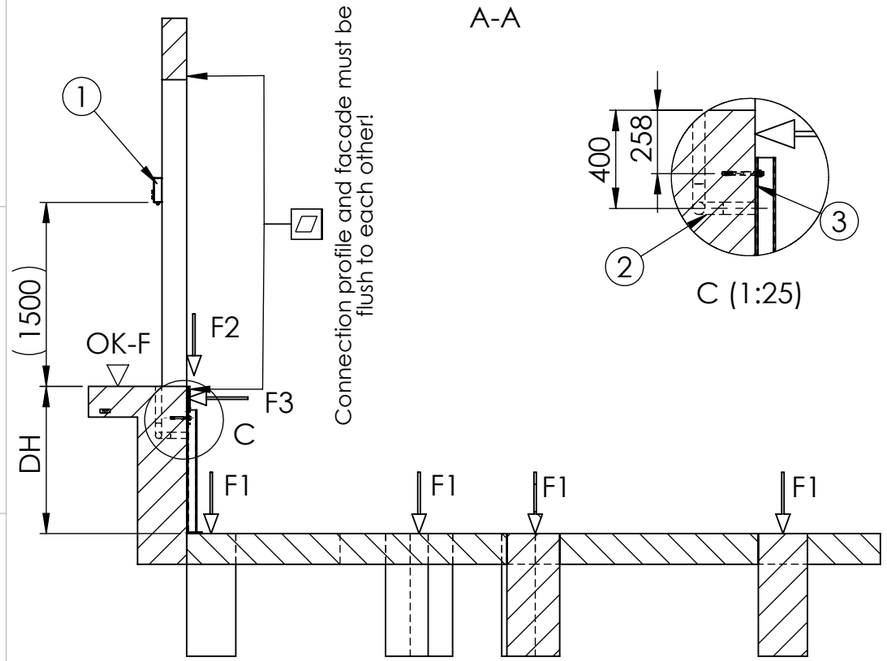

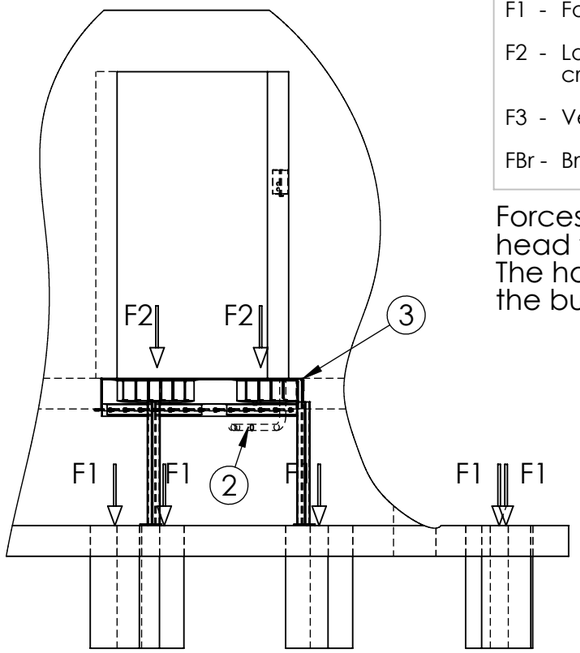

F1 - Foundation loads

F2 - Load resulting from forklift crossing

F3 - Vehicle impact load

FBr - Braking and starting load (forklift)

Forces F2 and FBr are led into the ramp head via the hinges.
The horizontal impact load F3 is led into the building via the ramp.

	Load capacity (kN)	
	60	100
F1	72kN	112kN
F2	42kN	70kN
F3	100kN	100kN
FBr	±10kN	±10kN

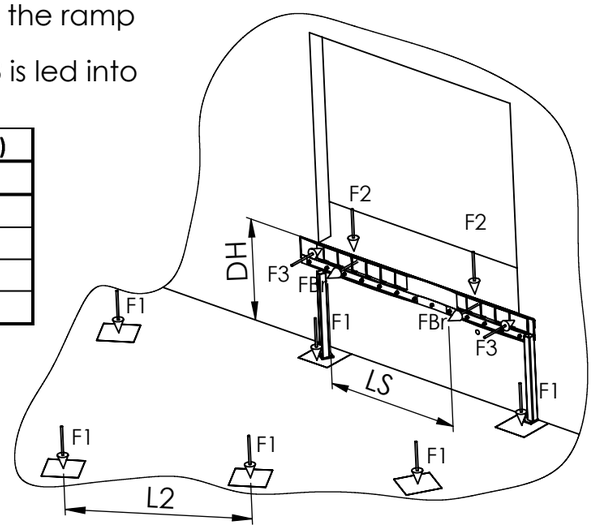

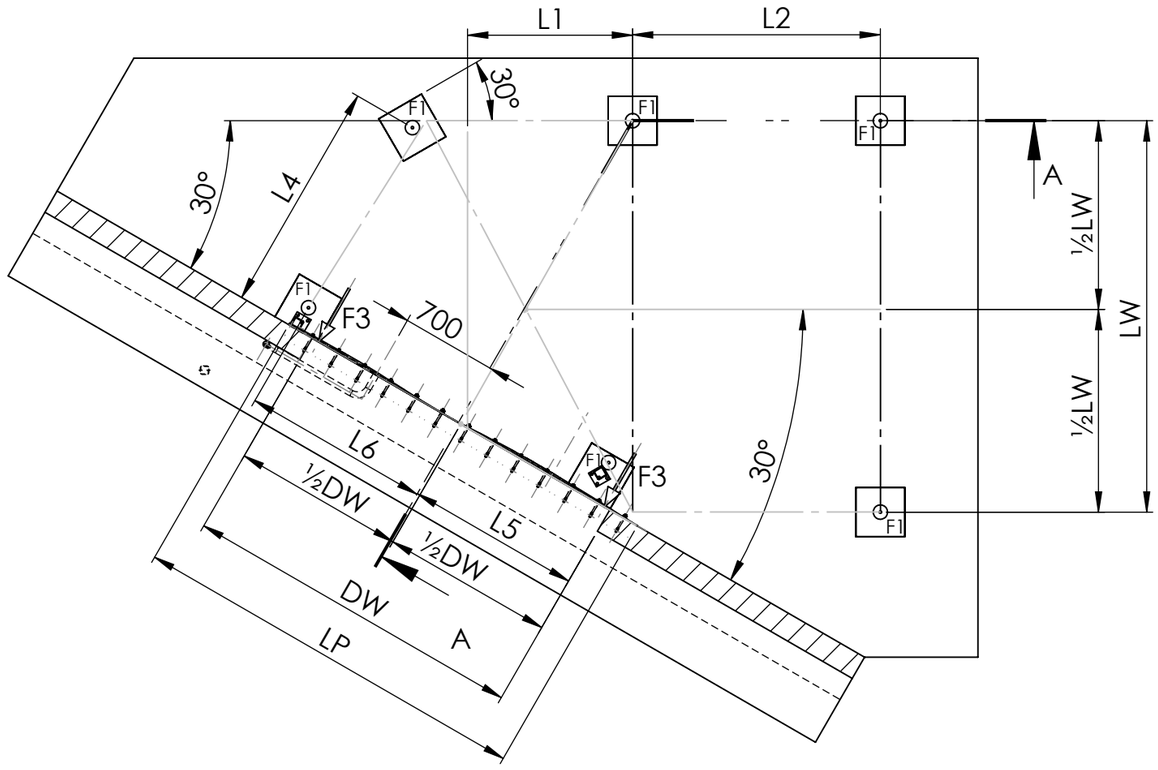

	NL			
	2000	2450	3000	3500
L2	2020	2470	3020	3520

	MW		
	3300	3500	3600
LW	3190	3390	3490
L1	1400	1500	1525
L4	1895	1970	2060
L5	1200	1300	1400
L6	1550	1650	1750
LP	3280	3480	3580

NW	LS
1750	1430
2000	1680
2200	1880
2250	1930
2400	2080

AW = Installation angle
MW = Loading ramp module width
NL = Dock leveller nominal lenght
NW = Dock leveller nominal width
OK-F = Finish floor level
OK-H = Yard level
DH = Dock height
LS = Distance of the force impact points at the ramp head for FBr and F2
LW = Distance of the force impact points at the foundations
LP = Length of ramp connection profile
DW = Door width
L1 = Distance between the outer foundations and the centre axis
L2 = Distance of the foundations centre axes

*Important:
A stable concrete sub-structure is required for installation.
(no concrete sandwich element / no thermal insulation composite system)

Placement of the conduits: either on the right or on the left side.
Illustration: installation on the right side

Pos.	Description
4	Required contact area 400 x 400 mm
3*	PWP - Angular platform 150°
2	Conduit for wiring internal diameter min. 50mm angles <45°
1	Electronic control (included)

UNLESS OTHERWISE SPECIFIED:
DIMENSIONS ARE IN MILLIMETERS
SURFACE FINISH:
TOLERANCES:
LINEAR:
ANGULAR:

FINISH:

DEBUR AND BREAK SHARP EDGES

DO NOT SCALE DRAWING

REVISION

MATERIAL:

	NAME	SIGNATURE	DATE
DRAWN	M. Baranowski	Baranowski	07.04.2025
CHK'D	M. Baranowski	Baranowski	07.04.2025
APPV'D	M. Baranowski	Baranowski	07.04.2025
MFG			
Q.A			

PJP MAKRUM Industial Group

PJP MAKRUM S.A.
Plac Kościeleckich 3
85-033 Bydgoszcz
POLAND

TITLE:

Foundation plan 150°

DWG NO. Fu.150°.A8-EN

A3

WEIGHT:

SCALE:1:50

SHEET 2 OF 4