SECTION A-A

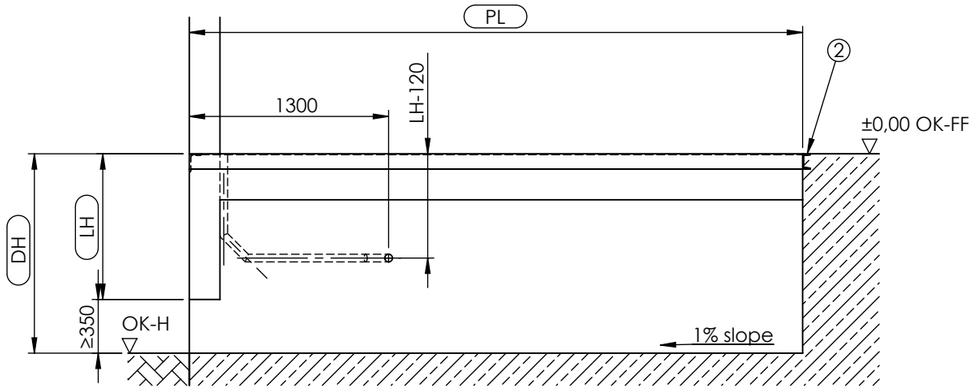

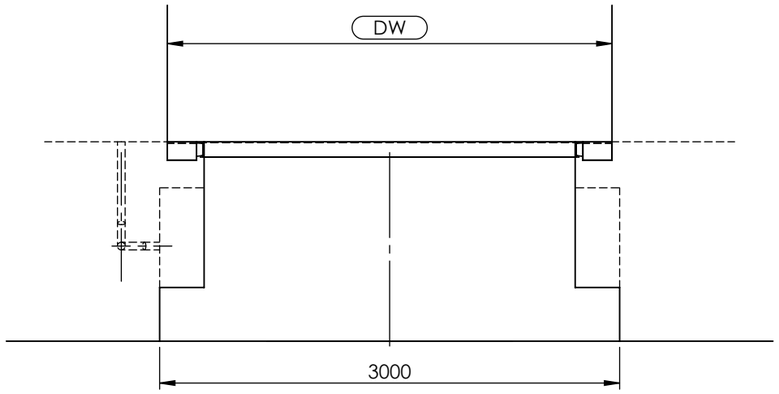

Check the minimum depth for tail-lift recommendation 3000 mm

load capacity	F1
60 kN	57 kN

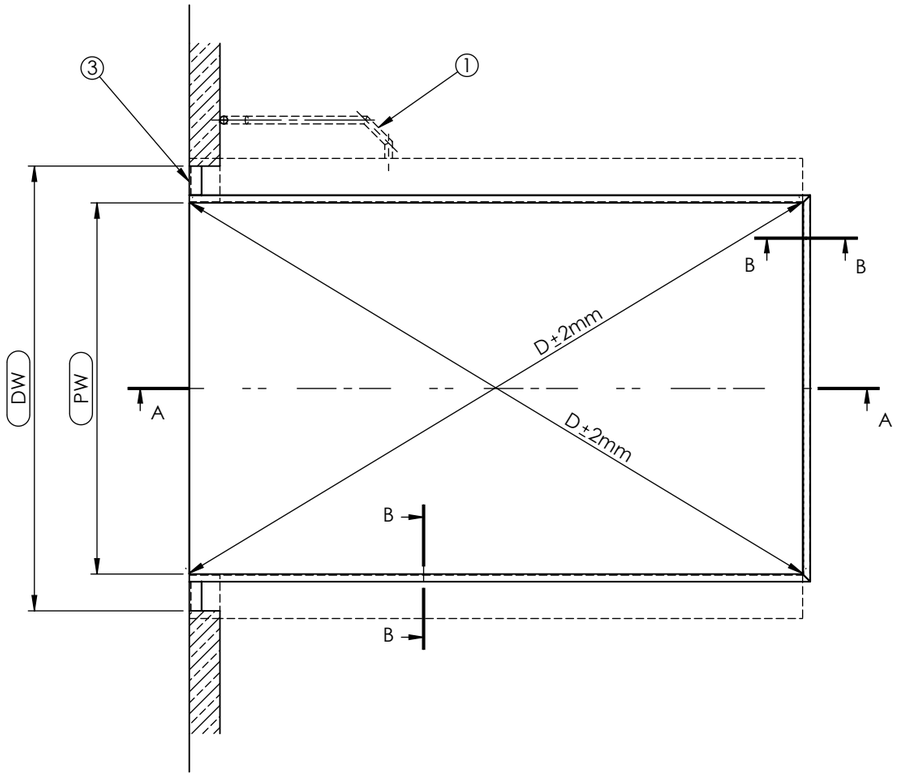

SECTION B-B
SCALE 1 : 10

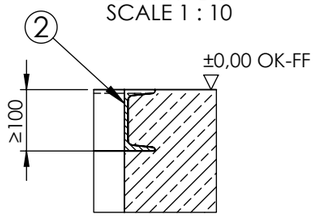

alternative

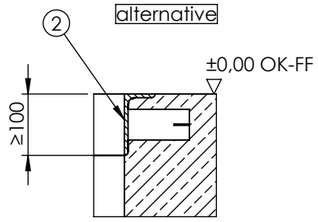

load

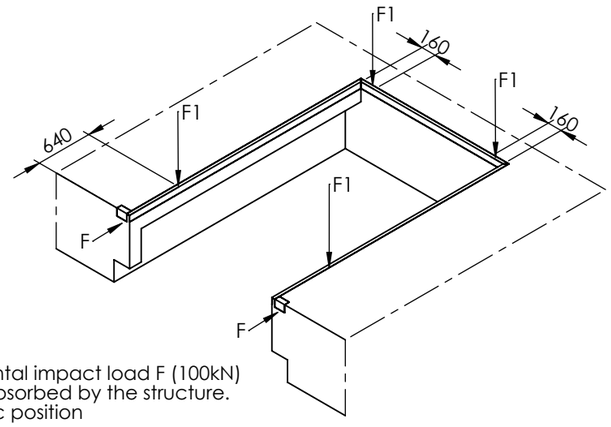

F = The horizontal impact load F (100kN) must be absorbed by the structure.
F1= cross traffic position

Placement of the conduits: either on the right or on the left side.
Illustration: installation on the right side

DH	Dock height
DW	Door width
OK-FF	Finish floor level
OK-H	Yard level
PL	Pit lenght
PW	Pit width
NL	Nominal lenght
NW	Nominal width
LH	Leveller height

by others
1 -Conduit for wiring internal diameter min. 50mm angles <45°
2 -Cast in frame
3 -Steel profile e.g. angle 120x80x10

Attention
-Do not deviate from the measurements given
-The corners of the pit must be square (diagonals must be equal)
-The preparation of the pit and the dowels by other

NL	3000	3500	4000	4500
LH	800	900	950	950
PL	2985	3485	3985	4485

NW	PW
2000	2020
2200	2220
2250	2270
2400	2420

Installation place drawn: NL=4000
NW=2400
LH=950

DIMENSIONS ARE IN MILLIMETERS

DO NOT SCALE DRAWING

REVISION E

MATERIAL:

	NAME	SIGNATURE	DATE
DRAWN	R. Słuszczak		22.05.2023
CHK'D			
APPV'D			
MFG			
Q.A			

PJP MAKRUM Industial Group
PJP MAKRUM S.A.
Plac Kościeleckich 3
85-033 Bydgoszcz
POLAND

TITLE:

PTU F with tail lift

DWG NO. PTU.00.00.06-EN

A3

WEIGHT:

SCALE:1:50

EN