SECTION A-A

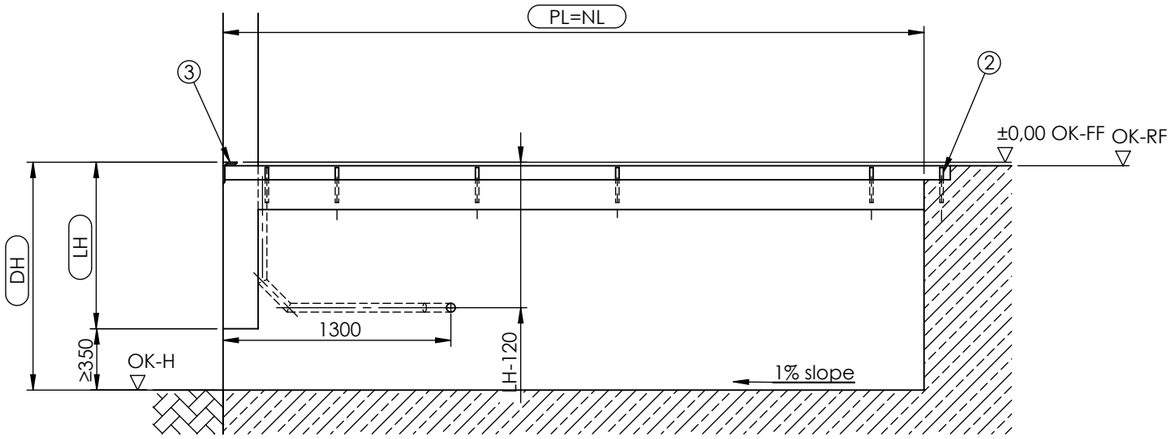

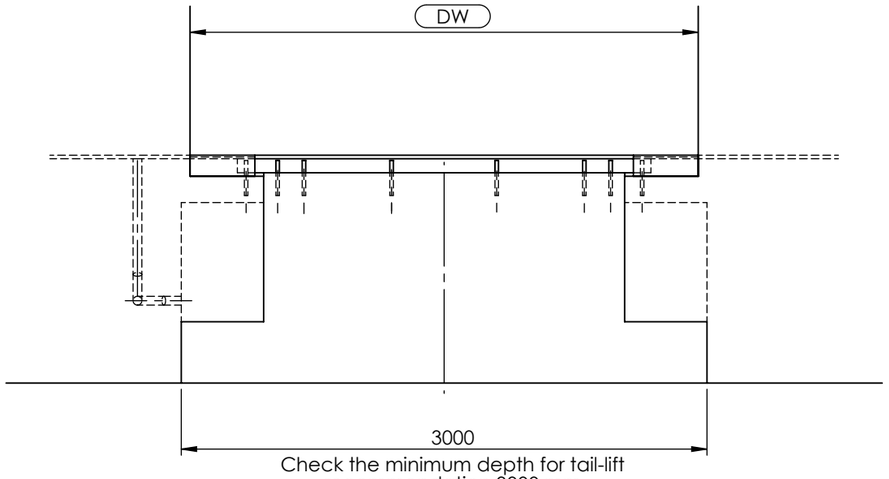

Check the minimum depth for tail-lift recommendation 3000 mm

load capability	F1
60 kN	57 kN

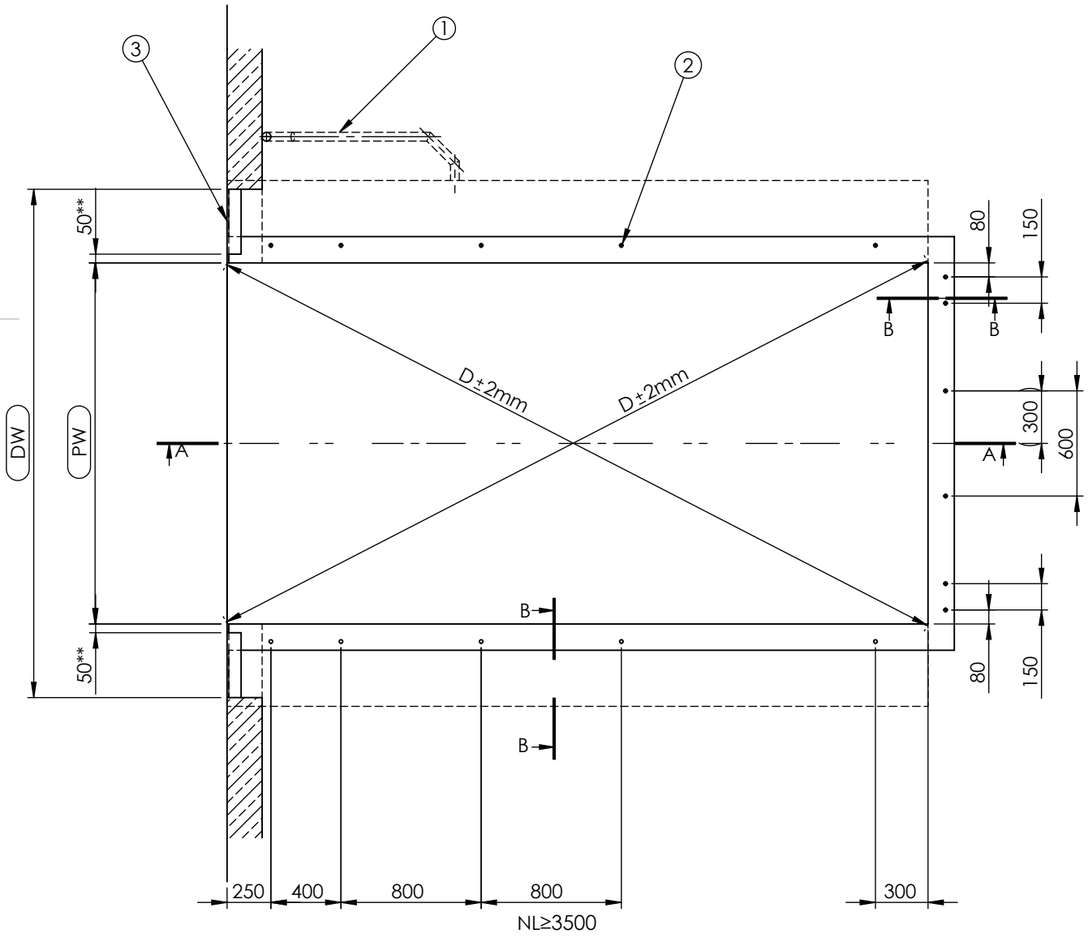

SECTION B-B
SCALE 1 : 10

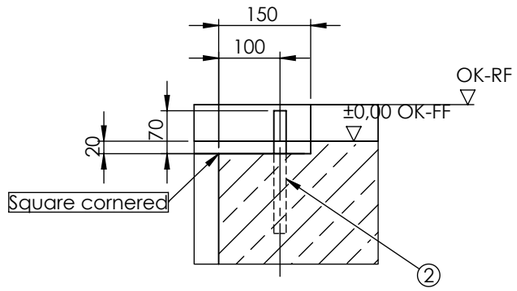

load

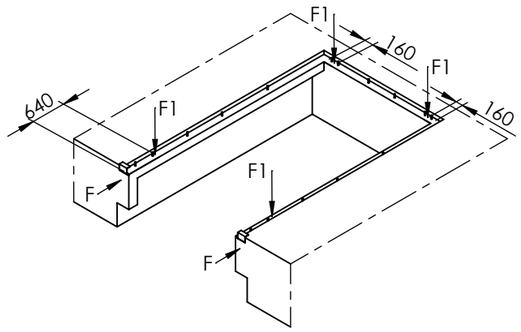

F = The horizontal impact load F (100kN) must be absorbed by the structure.
F1= cross traffic position

Placement of the conduits: either on the right or on the left side.
Illustration: installation on the right side

DH	Dock height	by others
DW	Door width	1 -Conduit for wiring internal diameter min. 50mm angles <45°
OK-FF	Finish floor level	2 -Plain steel dowel Ø20-200mm
OK-H	Yard level	3 -Steel profile e.g. angle 120x80x10
OK-RF	Floor base	** - 80mm by W-frame
PL	Pit lenght	Attention
PW	Pit width	-Do not deviate from the measurements given
NL	Nominal lenght	-The pit walls must be vertical
NW	Nominal width	-The corners of the pit must be square (diagonals must be equal)
LH	Leveller height	-The preparation of the pit and the dowels by others
n	Number fish-tails	
		*Cast in concrete after welding of the leveller or of the pre-frame. (by others)

NL	3000	3500	4000	4500
LH	800	900	950	950
n	14	16	16	16

NW	PW
2000	2060
2200	2260
2250	2310
2400	2460

Installation place drawn: NL=4000
NW=2000
LH=950

DIMENSIONS ARE IN MILLIMETERS

DO NOT SCALE DRAWING

REVISION D

	NAME	SIGNATURE	DATE
DRAWN	R. Słuszczak		22.05.2023
CHK'D			
APPV'D			
MFG			
Q.A			

PJP MAKRUM Industial Group
PJP MAKRUM S.A.
Plac Kościeleckich 3
85-033 Bydgoszcz
POLAND

TITLE:

PTU T/W with tail lift

DWG NO. PTU.00.00.01-EN

A3

SCALE:1:50

EN